SPECIFICATIONS 6.1

Table 6-1. Capacities

ITEM	LITERS	QUARTS
Engine coolant	2.4	2.54
Engine oil w/filter	4.3	4.5

Table 6-2. Coolant Pressure

ITEM	KPA	PSI
Cap lower limit	96	14
Rated cap pressure	110	16
Cap upper limit	124	18i
System pressure	103	15

Table 6-3. Coolant Temperatures

ITEM	˚C	˚F
Thermostat initially opens	85	185
Thermostat fully open	100	212
Engine temperature lamp	117	243
Antifreeze protection	- 36.7	- 34

Table 6-4. Fan Operation

STATUS	˚C	˚F
On	103	217
Off	98	208

TORQUE VALUES

ITEM	TORQUE		NOTES
Air bleed plug	9-11 Nm	80-97 **in-lbs**	page 6-9, 6-11, 6-13
Coolant hose clamps	3-4 Nm	27-35 **in-lbs**	page 6-16
Cross member fasteners	20-26 Nm	15-19 ft-lbs	page 6-22
Front cylinder coolant drain plug	9.7 Nm	86 **in-lbs**	page 6-9
Hose clamp - bright	3-4 Nm	27-35 **in-lbs**	page 6-13
Hose cover	3-4 Nm	27-35 **in-lbs**	page 6-13
Oil cooler to radiator	10-12 Nm	89-106 **in-lbs**	page 6-26
Oil line fittings	40-44 Nm	29-32 ft-lbs	page 6-19
Oil line manifolds to oil cooler fasteners	8-10 Nm	71-88 **in-lbs**	page 6-26
P-clamp	6-10 Nm	53-88 **in-lbs**	page 6-16, 6-16
Pipe clamp	6.5 Nm	57 **in-lbs**	page 6-16, 6-22
Pipe connection clamp	6-10 Nm	53-88 ft-lbs	page 6-11
Radiator drain plug	2.3-2.8 Nm	21-24 **in-lbs**	Hand tighten, page 6-9, 6-10, 6-12
Radiator hose clamps	3-4 Nm	27-35 **in-lbs**	page 6-22
Radiator oil line bracket	5-7 Nm	43-62 **in-lbs**	page 6-26
Thermostat housing fasteners	9.7 Nm	85 **in-lbs**	page 6-11
Top radiator mounting nuts	19-27 Nm	15-20 ft-lbs	page 6-22
Water pump mounting fasteners	9.7 Nm	85 **in-lbs**	page 6-13

COOLANT FLOW 6.2

GENERAL

The VRSC engine is cooled by a an ethylene-glycol coolant and the lubricating engine oil.

The ethylene-glycol coolant is pressurized and circulated through the engine and a cooling radiator by an impeller type water pump utilizing a thermostat controlled bypass.

The coolant pressure determines the coolant boiling point. The boiling point rises as the pressure increases and drops as the pressure decreases. At the rated system pressure of 103 kPa (15 psi), the boiling point rises to over 121˚ C (250˚ F).

The engine oil also cools the engine. Specifically, an oil jet under each piston sprays a mist of oil to lower the operating temperature of that piston. See 3.4 OIL FLOW.

FLOW DESCRIPTION

See Figure 6-1. To warm the engine up quickly, the ethylene-glycol coolant is re-circulated through the cylinders (13) and combustion chamber (12) in the cylinder heads. The thermostat (4) blocks the passage to the radiator (11) to recirculate the coolant.

As coolant exits the pump (3), it flows through the crankcase and around the cylinder liners (13) removing the heat build-up caused by the motion of the piston rings. From the cylinder liners (13), the coolant flows up through the cylinder head and around the exhaust valves and combustion chamber (12). After the coolant passes around the combustion chamber (12), it then flows back through the closed thermostat (4) into the pump (3) to repeat the cycle. This flow continues until the coolant reaches 85˚ C (185˚ F) and the thermostat (4) opens.

Once the coolant exceeds 100˚ C (212˚ F), the thermostat (4) remains open and blocks the by-pass between the entrance and exit ports of the case.

An engine coolant temperature (ECT) sensor is mounted to the thermostat (4). If the temperature should exceed 117˚ C (243˚ F), the engine coolant temperature indicator on the instrument cluster will illuminate.

After the coolant leaves the cylinder heads, it flows through the radiator coolant inlet pipe (5) to the radiator (11). The ethylene-glycol is cooled as it flows through the radiator (11) from left to right.

To increase the amount of air flowing through the radiator (11), two cooling fans will turn on when the coolant temperature exceeds 103˚ C (217˚ F) and will turn off when the temperature drops below 98˚ C (208˚ F).

The coolant exits the top right of the radiator (11) and flows through the radiator outlet coolant pipe (10) to the coolant pump (3) inlet.

The pressure cap (6) and radiator filler neck pressurize the coolant system. When the coolant pressure exceeds the pressure cap (6) lower limit of 96 kPa (14 psi), the lower valve opens and the excess pressure and expanded coolant flow to the overflow bottle (8) through the overflow tube (7). The overflow bottle (8) is vented to the atmosphere through a long tube (9) which loops over the top of the radiator/oil cooler assembly and down below the coolant level. When the pressure drops, the pressure cap (6) vacuum valve opens to draw coolant back into the coolant inlet pipe (5) from the overflow bottle (8).

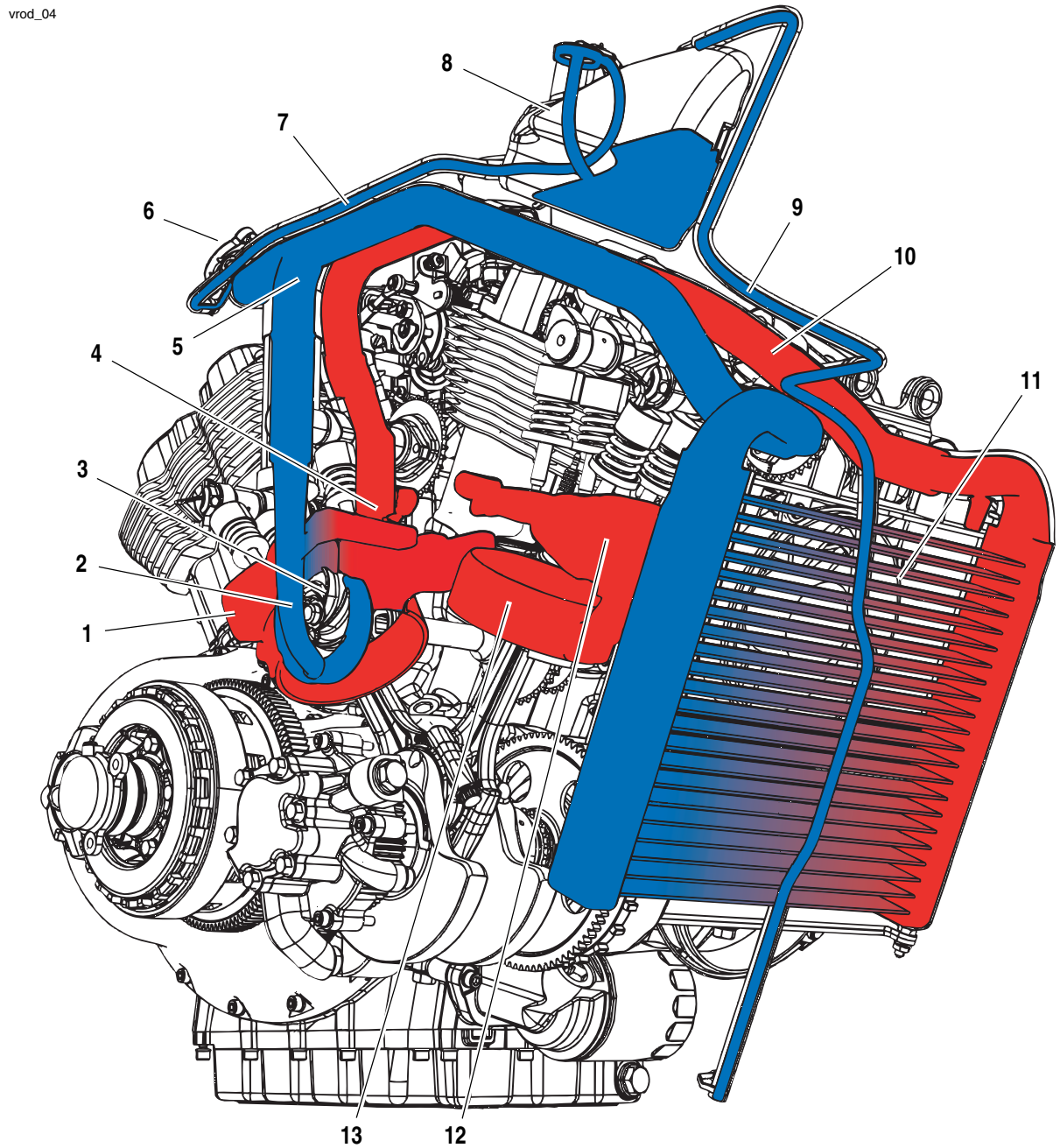

1. Red - hot coolant
2. Blue - cooled coolant
3. Water pump
4. Thermostat
5. Coolant inlet pipe
6. Pressure cap
7. Overflow tube
8. Overflow bottle
9. Overflow bottle vent tube
10. Coolant outlet pipe
11. Radiator
12. Combustion chamber coolant passages
13. Cylinder coolant passages

Figure 6-1. Engine Coolant Flow

TROUBLESHOOTING

⚠WARNING

The troubleshooting section of this manual is intended solely as a guide to diagnosing problems. Carefully read the appropriate sections of this manual before performing any work. Observe all cautions and warnings. Failure to observe cautions and warnings could result in death or serious injury.

Low Engine Temperature

1. Open thermostat.
2. Defective engine coolant sensor.
3. Defective cooling fan.

High Engine Temperature

1. Stuck thermostat.
2. Blocked hoses, pipes or passages.
3. Defective cooling fan.
4. Faulty water pump.
5. Low coolant level.
6. Air in hoses, pipe or passages.
7. Defective pressure cap.
8. Defective engine coolant sensor.

Coolant Leaks

1. Damaged pressure cap gasket.
2. Faulty water pump.
3. Deteriorated O-rings on water pump.
4. Damaged engine gasket.
5. Leaking hose or hose connection.

PRESSURE CAP

The pressure cap and radiator filler neck pressurize the coolant system. The pressure cap's upper spring diaphragm gasket seals to the upper sealing seat in the filler neck. The lower pressure limiting valve in the pressure cap seals to the lower seat. The filler neck has an overflow tube between and upper and lower sealing seat.

Rising pressure compresses the spring and the lower valve opens. Excess pressure and expanded coolant flow to the overflow bottle through the overflow tube. When the pressure drops, the vacuum valve opens to draw coolant back into the radiator through the overflow tube from the overflow bottle.

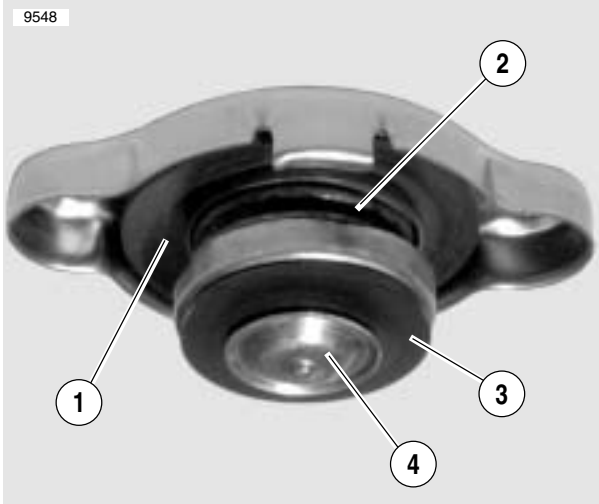

1. **Upper sealing gasket**
2. **Spring diaphragm**
3. **Lower sealing gasket**
4. **Vacuum valve**

Figure 6-2. Pressure Cap

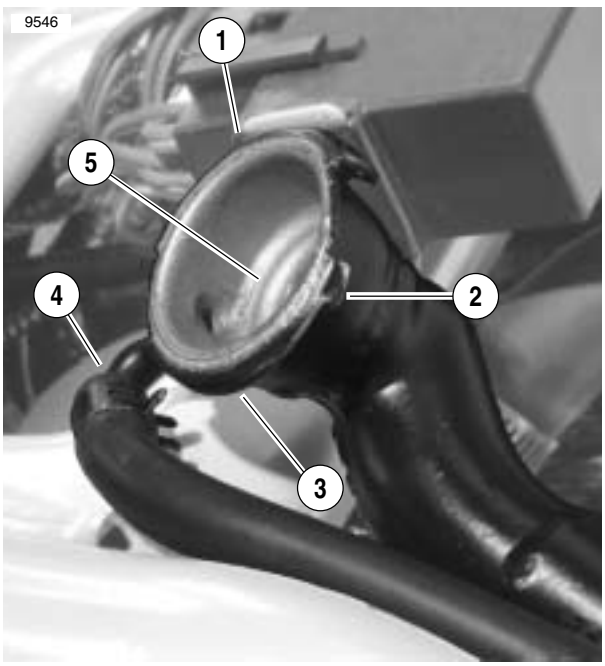

1. **Upper sealing seat**
2. **Safety stop**
3. **Cam**
4. **Overflow tube**
5. **Lower sealing seat**

Figure 6-3. Filler Neck

PRESSURE CAP TEST

PART NO.	SPECIALTY TOOL
HD-45335	Coolant system pressure tester

The pressure cap should be tested for the correct operating range every time the antifreeze is changed or any cooling system maintenance performed.

⚠WARNING

Do not remove radiator filler cap when engine is hot. The cooling system is under pressure and hot coolant and steam can escape, which could cause severe burns. Allow engine to cool before servicing the cooling system. (00091a)

1. See Figure 6-3. Using a cloth over pressure cap, turn cap 1/4 turn counterclockwise (CCW) to safety stop (2). Let pressure escape. Press down and turn cap to pass over safety stops and remove.
2. Inspect cap for gasket deterioration and broken springs.
3. Turn butterfly valve parallel to boss on COOLANT SYSTEM PRESSURE TESTER (HD-45335) tester head and turn pressure cap adapter onto tester head. Turn butterfly valve perpendicular to seal tester head.

NOTE

To test new caps, wet the upper sealing gasket before turning onto adapter.

4. Turn pressure cap onto adapter. Rotate to safety stops.
5. See Figure 6-4. Pump handle to pressurize pressure limiting valve in cap. Stop pumping when pressure valve in cap opens.
6. Replace pressure cap if:
   a. Leaks below low limit, 96 kPa (14 psi).
   b. Opens above high limit, 124 kPa (18 psi).
   c. Pressure falls rapidly when pressurized within range.
7. Open butterfly valve and remove adaptor and cap.

Figure 6-4. Pressure Cap Test

SYSTEM PRESSURE TEST

PART NO.	SPECIALTY TOOL
HD-45335	Coolant system pressure tester

The cooling system can be pressure tested to identify a leak and to verify a blown engine gasket.

1. Before troubleshooting cooling system, be sure engine coolant level is at COLD FULL mark on overflow bottle when the motorcycle is on the jiffy stand.
2. Using a cloth over pressure cap, turn cap 1/4 turn counterclockwise (CCW) to safety stop. Let pressure escape. Press down and turn cap to pass over safety stops and remove.
3. See Figure 6-3. Clean and inspect filler neck, upper (1) and lower (5) sealing seats, overflow tube (4), and overflow bottle.

NOTE

Bent filler neck cams and safety stops can cause cap to leak or affect pressure limiting valve. Replace the coolant pipe as required.

4. See Figure 6-5. Turn butterfly valve parallel to boss on COOLANT SYSTEM PRESSURE TESTER (HD-45335) head and turn adapter onto head. Turn butterfly valve perpendicular to seal head to adapter.

NOTE

Wet the upper sealing surfaces before turning adapter onto tester head.

5. Turn double ended pressure cap onto the end of the adapter and onto filler neck. Rotate to the safety stops.

CAUTION

When performing the coolant system pressure test, never exceed the upper limit rating of the pressure cap. Excessive pressure can rupture cooling pipes, hoses, and radiator.

6. Pump tester until pressure reaches 103 kPa (15 psi).
7. Refer to Table 6-5. Match movement of needle to system pressure.

Table 6-5. System Pressure Test

NEEDLE MOVEMENT	LEAK	ACTION
Holds steady for 2 minutes	None	None
Drops slowly	Small	Dye test
Drops quickly	Major	Visual

8. Release pressure in system by turning butterfly pressure valve perpendicular to head. Wait until pressure is released before removing double ended cap from filler neck.

Figure 6-5. System Pressure Test

LEAK DETECTION DYE TEST

PART NO.	SPECIALTY TOOL
HD-29545-6	Coolant fluorescent leak detection dye
HD-35457	Black light leak detector

NOTE

If the coolant overflow bottle is empty when the engine is cold, it is possible that air has been drawn into the coolant system. The system must be purged of any trapped air and refilled with coolant.

1. Before troubleshooting cooling system be sure engine coolant level is at COLD FULL mark on overflow bottle when the motorcycle is on the jiffy stand.

WARNING

Do not remove radiator filler cap when engine is hot. The cooling system is under pressure and hot coolant and steam can escape, which could cause severe burns. Allow engine to cool before servicing the cooling system. (00091a).

2. Using a cloth over pressure cap, turn cap 1/4 turn counterclockwise (CCW) to safety stop. Let pressure escape. Press down and turn cap to pass over safety stops of filler neck and remove.
3. If filler neck is full of coolant, remove an amount of coolant equal to the amount of dye.
4. See Figure 6-6. Pour COOLANT FLUORESCENT LEAK DETECTION DYE (HD-29545-6) into filler neck.

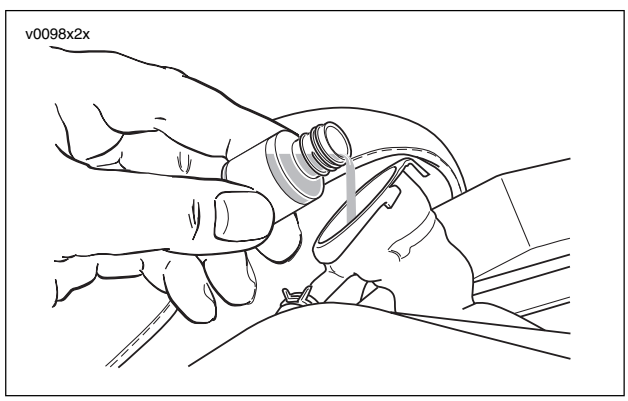

Figure 6-6. Pouring Dye into Filler Neck

5. Reinstall pressure cap and run engine for 10 minutes.
6. Use BLACK LIGHT LEAK DETECTOR (HD-35457) to illuminate entire cooling system. A yellow fluorescence at any spot indicates a leak.
7. Remove oil dipstick and inspect engine oil for yellow dye.

NOTE

Dye in the oil may indicate a damaged engine head gasket. Draining and replacing coolant contaminated oil will be necessary as part of engine service.

TESTS FOR BLOWN GASKET

PART NO.	SPECIALTY TOOL
HD-45335	Coolant system pressure tester

If a pressure test indicates a leak but there is no visible leak, even after a leak detection dye test, perform the following tests to verify a damaged engine gasket.

1. Start and run cold engine. White smoke from exhaust system indicates a blown gasket.
2. Run engine. Shut off engine.
   a. Remove oil level dipstick. Light colored foam on dipstick indicates a blown gasket.
   b. Open oil drain plug and drain a small amount of oil. Water or coolant will drain out first if gasket is blown.

CAUTION

Do not allow pressure to build up past the maximum for system. If pressure rises past, turn off engine and turn butterfly pressure valve perpendicular to tester head to release pressure.

WARNING

Do not continue to run engine unattended with COLLANT SYSTEM PRESSURE TESTER installed. There is no safety valve with the pressure cap removed and the COLLANT SYSTEM PRESSURE TESTER installed.

3. With COOLANT SYSTEM PRESSURE TESTER (HD-45335) installed, start cold engine and idle engine to normal operating temperature.
   a. If gauge indicates fast pressure build up, a gasket is blown.
   b. If pressure does not build up immediately, pump tester to system pressure. If gauge needle vibrates, there is a compression or combustion leak. Disconnect one spark plug at a time. The needle will stop vibrating when spark is removed from leaking cylinder.

NOTE

After replacing an engine head gasket, draining and replacing contaminated oil will be necessary as part of engine service.

ENGINE COOLANT 6.3

GENERAL

GENUINE HARLEY-DAVIDSON EXTENDED LIFE ANTI-FREEZE & COOLANT provides temperature protection to -36.7˚ C (-34˚ F).

GENUINE HARLEY-DAVIDSON EXTENDED LIFE ANTI-FREEZE & COOLANT is pre-diluted and ready to use full-strength. DO NOT add water. A mixture of de-ionized water and ethylene glycol-based antifreeze may be used if GENUINE HARLEY-DAVIDSON EXTENDED LIFE ANTIFREEZE & COOLANT is unavailable.

NOTE

When temperatures drop below -36.7˚ C (-34˚ F), a mixture of ethylene glycol-based antifreeze and de-ionized water can be mixed to provided additional protection. Follow the directions on the container of un-diluted ethylene glycol to arrive at a percentage mixture that will provide protection for the anticipated temperatures.

REPLACING COOLANT

PART NO.	SPECIALTY TOOL
HD-23688	Coolant & battery tester - Fahrenheit
HD-26568	Coolant & battery tester - Celsius

⚠WARNING

Do not remove radiator filler cap when engine is hot. The cooling system is under pressure and hot coolant and steam can escape, which could cause severe burns. Allow engine to cool before servicing the cooling system. (00091a)

1. Allow cooling system to cool.
2. Remove right side cover and maxi-fuse. See 8.5 MAXI-FUSE.
3. Open seat. Using a cloth over pressure cap, turn cap 1/4 turn counterclockwise (CCW) to safety stop. Let pressure escape. Press down and turn cap to pass over safety stops and remove.
4. Use COOLANT AND BATTERY TESTER (HD-23688 or HD-26568) to test antifreeze protection.
   a. Place a few drips of sample on prism and close cover.
   b. Hold prism up to light and read temperature scale through eye piece.

NOTE

There are several scales visible in eye piece. Read only the temperature scale labeled ethylene-glycol. If the indicated temperature is less than the rated or required protection, replace the antifreeze.

5. Remove airbox cover. Remove air filter top, and air filter. See 1.4 AIRBOX AND AIR FILTER.

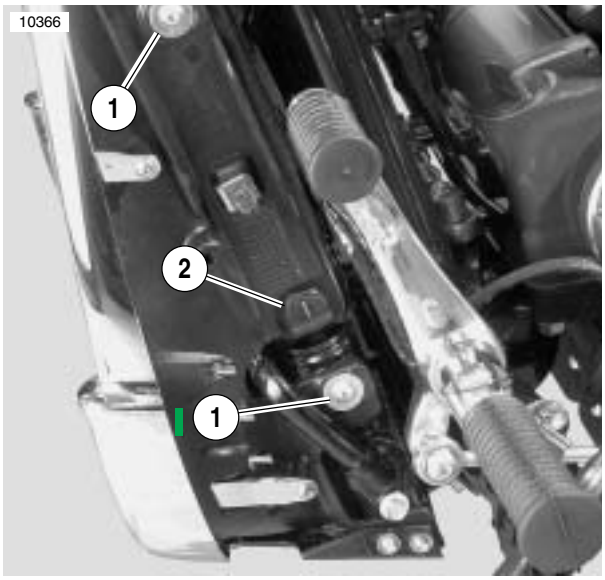

1. Radiator cover fastener and washer
2. Radiator drain plug

Figure 6-7. Radiator Left Side (cover removed)

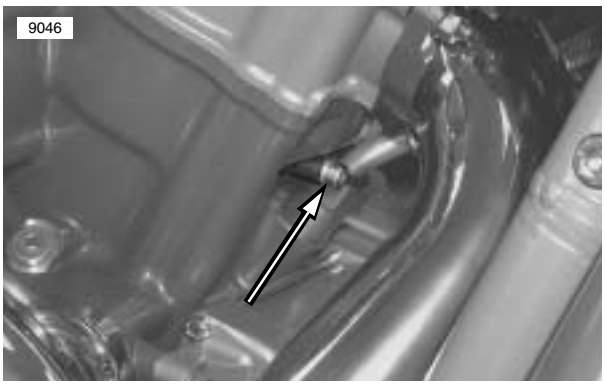

Figure 6-8. Front Cylinder Coolant Drain Plug @ 9.7 Nm (86 in-lbs)

Figure 6-9. Air Bleed Plug @ 9-11 Nm (80-97 in-lbs)

6. See Figure 6-7. Remove left side radiator trim cover. Place a container under engine coolant radiator.
7. See Figure 6-10. Loosen but do not remove radiator drain plug. Orient radiator drain plug so that slot in threads is open to container and allow coolant to drain from the radiator.
8. Hand tighten radiator drain plug.

NOTE

Correct torque on the radiator drain plug is 2.3-2.8 Nm (21-24 ***in-lbs****).*

9. See Figure 6-8. Place a container under engine and remove front cylinder coolant drain plug. Allow remaining coolant to drain from engine.

NOTE

With the motorcycle in normal orientation, there is no need to remove the rear cylinder coolant drain plug.

10. Install and tighten front cylinder coolant drain plug to 9.7 Nm (86 **in-lbs**).
11. Reinstall radiator trim cover.

CAUTION

De-ionized water must be used with the antifreeze in the cooling system. Hard water can cause scale accumulation in water passages which reduces cooling system efficiency, leading to overheating and engine damage. (00195a)

⚠WARNING

Coolant mixture contains toxic chemicals, which may be fatal if swallowed. If swallowed, do not induce vomiting; call a physician immediately. Use in a well ventilated area. Irritation to skin or eyes can occur from vapors or direct contact. In case of skin or eye contact, flush thoroughly with water and go to hospital, if necessary. Dispose of used coolant according to federal, state and local regulations. (00092a)

12. See Figure 6-9. Loosen air bleed plug.
13. Through the filler neck, fill with GENUINE HARLEY-DAVIDSON EXTENDED LIFE ANTIFREEZE & COOLANT up to lower sealing surface in filler neck.
14. Reinstall pressure cap and tighten air bleed plug to 9-11 Nm (80-97 **in-lbs**).
15. Reinstall air filter, air filter top, and airbox cover.
16. Reinstall maxi-fuse and side cover.
17. After running engine, check coolant level in overflow bottle with coolant cold with motorcycle on jiffy stand. If level is below COLD FULL line, add antifreeze to overflow bottle until fluid level reaches COLD FULL line.
18. Continue to run engine, check level, and add antifreeze until fluid level remains at COLD FULL line with motorcycle on jiffy stand.

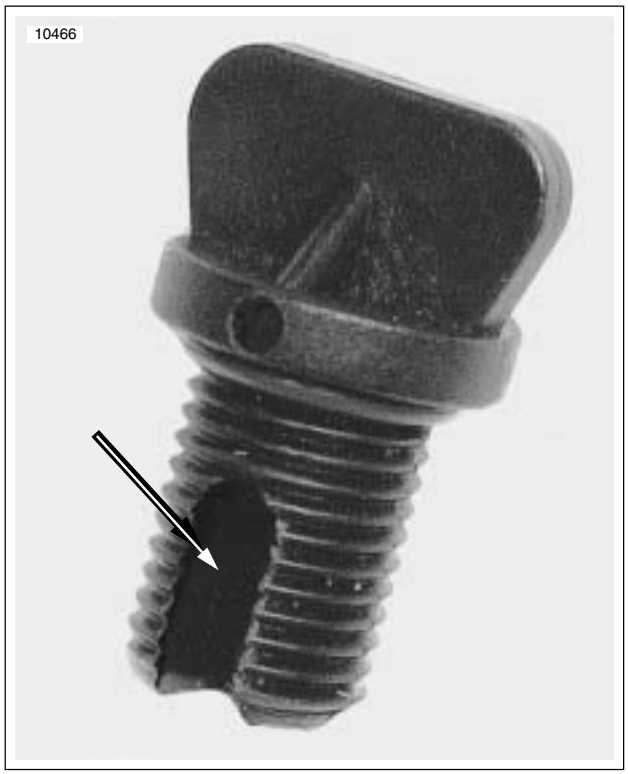

Figure 6-10. Slot in Radiator Drain Plug

THERMOSTAT 6.4

GENERAL

The thermostat is a valve that remains closed until the engine reaches operating temperature. When the coolant temperature exceeds 85˚ C (185˚ F), the thermostat opens allowing engine coolant to flow out of the engine to the radiator. The thermostat is fully open at 100˚ C (212˚ F).

REMOVAL

PART NO.	SPECIALITY TOOL
HD-45307	Thermostat removal tool

⚠WARNING

Do not remove radiator filler cap when engine is hot. The cooling system is under pressure and hot coolant and steam can escape, which could cause severe burns. Allow engine to cool before servicing the cooling system. (00091a)

1. Allow cooling system and engine to cool.
2. Remove right side cover and maxi-fuse.
3. Open seat and remove pressure cap.
4. Remove left side radiator trim cover.
5. Loosen radiator drain plug and orient slot in drain plug to drain engine coolant into suitable container. See 6.3 ENGINE COOLANT.
6. Hand tighten radiator drain plug.

NOTE

*Correct torque on the radiator drain plug is 2.3-2.8 Nm (21-24 **in-lbs**).*

7. Remove air filter cover, air filter top, air filter, breather hose, velocity stacks, and air filter bottom. See 1.4 AIRBOX AND AIR FILTER.
8. Remove pipe clamp and p-clamp from coolant pipes.
9. Loosen lower clamp on hose to engine coolant pipe. Pull coolant outlet pipe and hose up.
10. Loosen and remove fasteners and lock washers holding housing to engine case. Pull thermostat housing off engine.
11. See Figure 6-11. Disconnect coolant temperature sensor (1) from wiring harness.

NOTE

See Figure 6-11. The sensor (1) for the engine coolant temperature is threaded into the engine side of the thermostat housing. When illuminated red, the engine coolant temperature indicator lamp on the instrument cluster indicates that the coolant temperature has exceeded 117˚ C (243˚ F).

12. Pull thermostat tubes (4) and O-rings (3) out of engine.

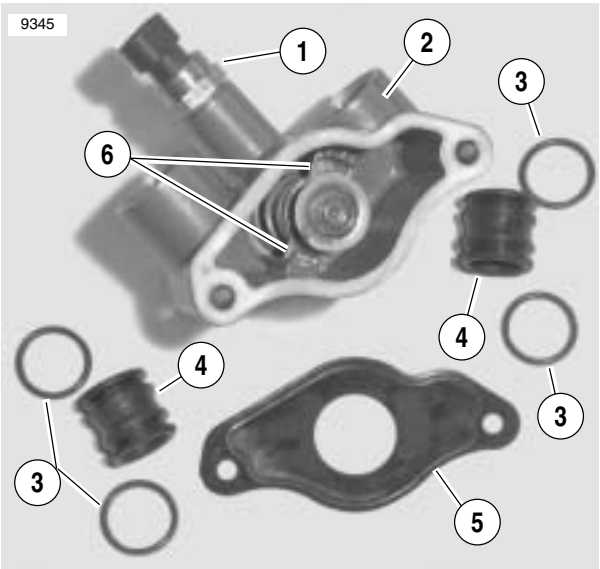

1. **Engine coolant temperature sensor**
2. **Thermostat housing**
3. **O-ring**
4. **Thermostat tube**
5. **Gasket**
6. **Tabs**

Figure 6-11. Thermostat and Housing

13. See Figure 6-12. To remove thermostat from housing, engage tabs on thermostat with slots of THERMOSTAT REMOVAL TOOL (Part No. HD-45307).
14. Press on end of tool to compress thermostat spring while turning tool 90° counterclockwise (CCW). Remove thermostat.

INSTALLATION

PART NO.	SPECIALITY TOOL
HD-45307	Thermostat removal tool

1. See Figure 6-12. To install **new** thermostat into housing, engage slots of THERMOSTAT REMOVAL TOOL (HD-45307) into tabs of thermostat while compressing thermostat spring. Turn tool 90° clockwise (CW) to lock thermostat into housing.

NOTE

New components can be lubricated with engine coolant to ease assembly.

2. See Figure 6-11. With **new** O-rings (3) on thermostat tubes (4), push tubes into engine case.
3. Connect engine coolant temperature sensor (1) to wiring harness.
4. Be sure lower clamp is in place on hose to engine coolant pipe.
5. Orient **new** thermostat housing gasket (5) to mating surface on engine case.
6. Push housing pipe into pipe hose and over thermostat tubes (4). Fit housing (2) to engine case.
7. Thread in housing fasteners and tighten to 9.7 Nm (85 **in-lbs**).
8. With lower hose clamp in correct orientation, tighten clamp to 3-4 Nm (27-35 **in-lbs**).
9. Install pipe clamp and p-clamp. Tighten fasteners to 6-10 Nm (53-88 ft-lbs).
10. Install air filter bottom, velocity stacks, O-rings and breather hose. See 1.4 AIRBOX AND AIR FILTER.
11. Loosen air bleed plug. Remove pressure cap and fill with GENUINE HARLEY-DAVIDSON EXTENDED LIFE ANTIFREEZE & COOLANT through filler neck.
12. Tighten air bleed plug to 9-11 Nm (80-97 **in-lbs**) and reinstall pressure cap.
13. Reinstall air filter, air filter top and airbox cover.
14. Reinstall maxi-fuse and side cover.
15. Rinse the motorcycle with water to remove any spilled coolant.
16. After running engine, check coolant level in overflow bottle with coolant cold and motorcycle on jiffy stand. If level is below COLD FULL line, remove cap from overflow bottle and add antifreeze until fluid level reaches COLD FULL line.
17. Continue to run engine, check level, and add antifreeze until coolant level remains at COLD FULL line with the motorcycle on the jiffy stand.

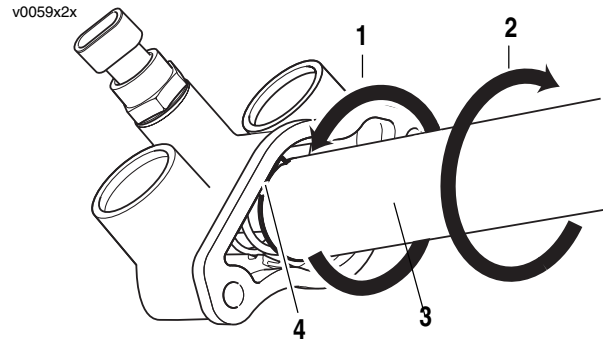

1. **To remove - counterclockwise**
2. **To install - clockwise**
3. **Thermostat removal tool (HD-45307)**
4. **Tab**

Figure 6-12. Thermostat Removal Tool

REMOVAL

WARNING

Do not remove radiator filler cap when engine is hot. The cooling system is under pressure and hot coolant and steam can escape, which could cause severe burns. Allow engine to cool before servicing the cooling system. (00091a)

1. Allow cooling system to cool.
2. Remove right side cover and maxi-fuse. See 8.5 MAXI-FUSE.
3. Open seat and remove pressure cap.
4. Remove left side radiator trim cover.
5. Loosen and orient slot in radiator plug to drain engine coolant into suitable container.
6. Place a suitable container under engine and remove front engine coolant drain plug to drain coolant from engine.

NOTE

With the motorcycle in normal orientation, there is no need to remove the rear engine coolant drain plug.

7. Hand tighten radiator drain plug.

NOTE

Correct torque on the radiator drain plug is 2.3-2.8 Nm (21-24 ***in-lbs****).*

8. Install and tighten front engine coolant drain plug to 9.7 Nm (86 **in-lbs**).
9. Reinstall left side radiator trim cover.
10. Remove airbox cover. Remove air filter top and air filter. See 1.4 AIRBOX AND AIR FILTER.
11. Remove pipe clamp and p-clamp from coolant pipes. See 6.6 COOLANT PIPES AND HOSES.
12. Remove hose cover clamp from upper end of hose to coolant pipe and loosen lower hose clamp. Pull coolant pipe up.
13. See Figure 6-13. Unbolt water pump bolts and remove water pump cover.
14. Remove the insert.
15. See Figure 6-14. Using a soft mallet, tap on side of water pump to loosen.
16. See Figure 6-15. Remove bearing housing assembly with the O-rings and gasket.

Figure 6-13. Removing Cover

Figure 6-14. Removing Water Pump (clutch cover removed for clarity)

Figure 6-15. Water Pump Bearing Housing Assembly (clutch cover removed for clarity)

INSTALLATION

1. Clean engine cavity.
2. See Figure 6-16. Lube and install **new** O-ring (6) on bearing housing assembly (5).
3. Install **new** gasket (7) with part numbers facing out on the face of water pump.
4. Align pump square drive with drive shaft and push water pump into engine cavity.

NOTE

A lubricant, as tire soap or detergent and water, can be used to lubricate the hose to aid in pushing hose over neck beads.

5. Thread on mounting bolts (1) holding bearing housing assembly (5), water pump insert (4) and water pump cover (2) over water pump cavity.
6. Tighten water pump mounting bolts to 9.7 Nm (86 **in-lbs**).
7. Push pump to engine coolant pipe hose on cover outlet pipe (3).
8. Install lower bright hose clamp and tighten to 3-4 Nm (27-35 **in-lbs**).
9. Install and tighten hose cover to 3-4 Nm (27-35 **in-lbs**).
10. Install pipe clamp and p-clamp. See 6.6 COOLANT PIPES AND HOSES.
11. Loosen air bleed plug. Fill with GENUINE HARLEY-DAVIDSON EXTENDED LIFE ANTIFREEZE & COOLANT through filler neck.
12. Tighten air bleed plug to 9-11 Nm (80-97 **in-lbs**) and reinstall pressure cap.
13. Reinstall maxi-fuse and right side cover.
14. Rinse motorcycle with water to remove any spilled collant.
15. After running engine, check coolant level in overflow bottle with coolant cold and motorcycle on jiffy stand. If level is below COLD FULL line, remove cap from overflow bottle and add antifreeze until fluid level reaches COLD FULL line.
16. Continue to run engine, check level, and add antifreeze until fluid level remains at COLD FULL line with motorcycle on jiffy stand.

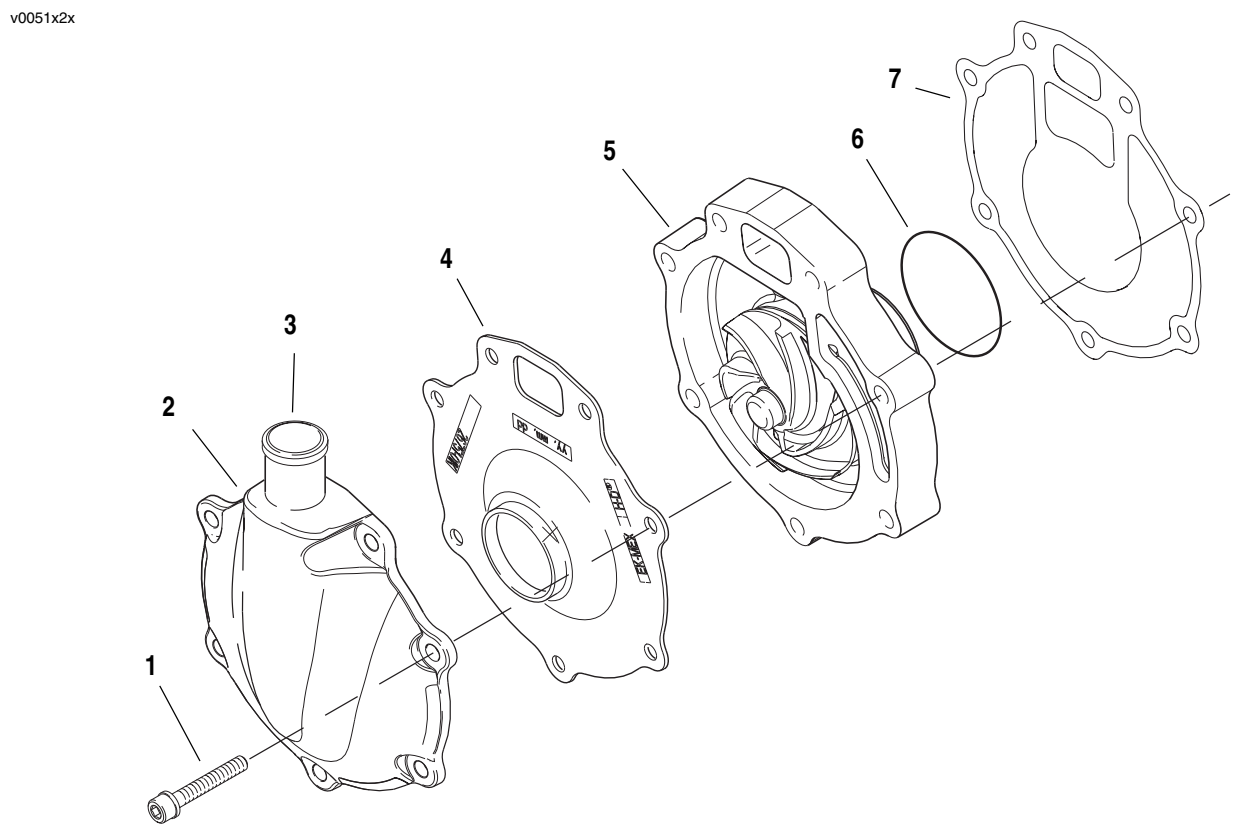

1. **Mounting bolt @ 9.7 Nm (86 in-lbs)**
2. **Water pump cover**
3. **Cover outlet pipe**
4. **Water pump insert**
5. **Bearing housing assembly**
6. **O-ring (2)**
7. **Gasket**

Figure 6-16. Water Pump

COOLANT PIPES AND HOSES 6.6

REMOVAL

1. Allow cooling system to cool.
2. Remove right side cover and maxi-fuse. See 8.5 MAXI-FUSE.

WARNING

To prevent accidental vehicle start-up, which could cause death or serious injury, disconnect negative (-) battery cable before proceeding. (00048a)

3. Remove the negative battery cable.

WARNING

Do not remove radiator filler cap when engine is hot. The cooling system is under pressure and hot coolant and steam can escape, which could cause severe burns. Allow engine to cool before servicing the cooling system. (00091a)

4. Open seat and remove pressure cap.
5. Remove left side radiator trim cover. Remove radiator plug and drain engine coolant into suitable container.
6. Remove air filter top, air filter, breather hose, velocity stacks and air filter bottom. See 1.4 AIRBOX AND AIR FILTER.
7. See Figure 6-17. Loosen pipe clamp (4). Loosen and remove fastener (7) holding p-clamp (8) to engine.
8. Squeeze clamp (17) and pull off end of overflow hose (23) at overflow bottle (14). Pull drain hose to radiator/oil cooler off overflow bottle. Remove overflow bottle (14).
9. Loosen clamps (12, 19) on bottom of hoses to water pump and thermostat.
10. Use a long thin screwdriver (Snap-on Part No. SDD1410) to loosen clamps (12) and pull hoses (10, 13) off radiator.
11. Remove engine coolant pipes (2, 3) with hoses (10, 13, 20, 21).

DISASSEMBLY

1. See Figure 6-17. Cut shrink clamps (9) from the coolant inlet and the coolant outlet pipes (2, 3) and hoses (10, 13, 21).

NOTE

To remove shrink clamps without cutting, use a soldering iron and, carefully, melt a slice through the band without damaging the hose.

2. Loosen overflow hose clamp (17) and remove overflow hose (23) from filler neck.
3. Remove hose cover (22) and loosen upper clamp (19) from the water pump to coolant inlet pipe hose.
4. Clean hose mounting stems on the engine coolant inlet pipe (2) and the engine coolant outlet pipe (3) with a wire brush.
5. Inspect all components and replace as required.

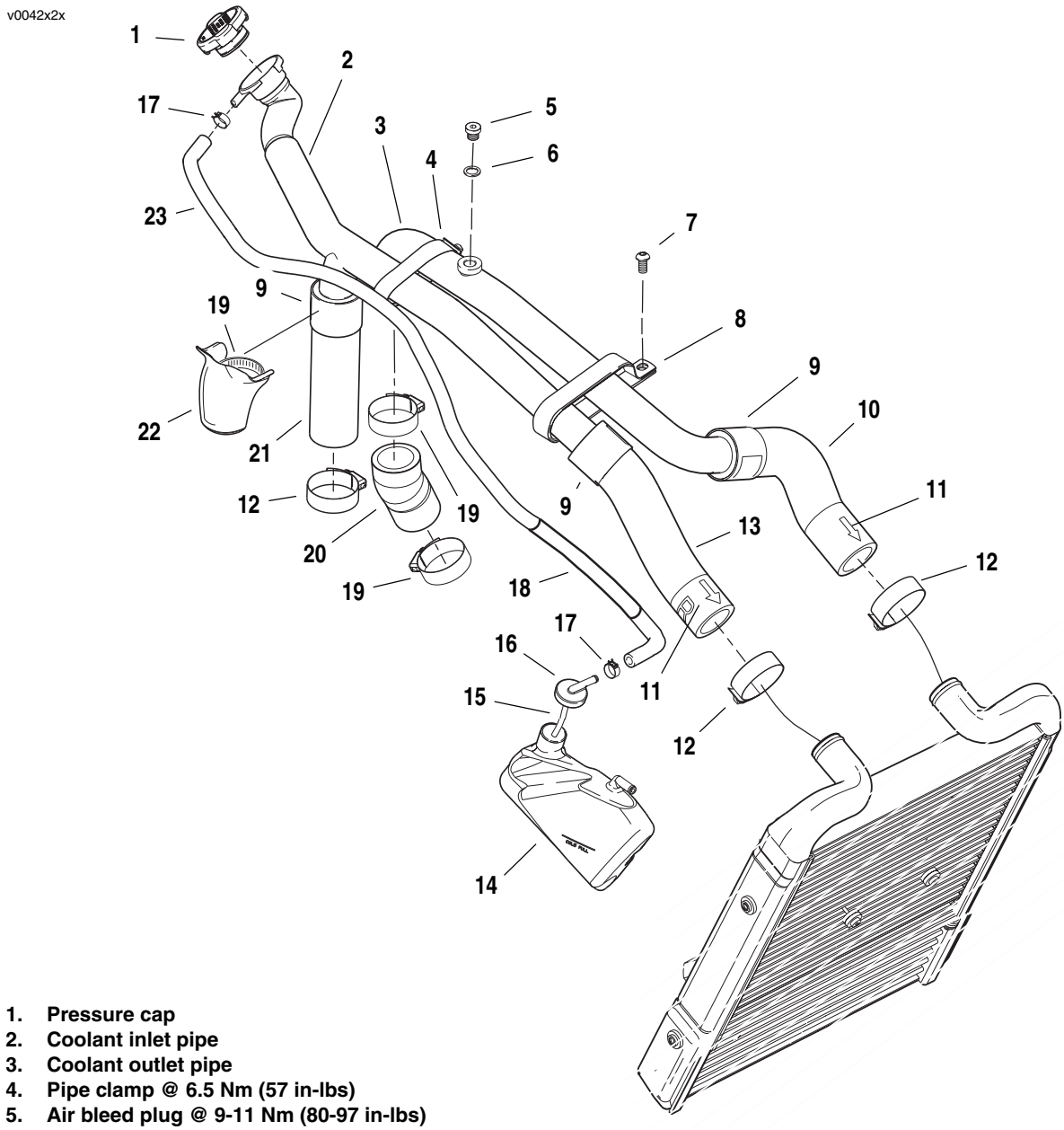

1. Pressure cap
2. Coolant inlet pipe
3. Coolant outlet pipe
4. Pipe clamp @ 6.5 Nm (57 in-lbs)
5. Air bleed plug @ 9-11 Nm (80-97 in-lbs)
6. Seal
7. Fastener
8. P-clamp @ 6-10 Nm (53-88 in-lbs)
9. Shrink clamp
10. Hose - engine coolant outlet pipe to radiator
11. Embossed arrow - top and front
12. Clamp - bright @ 3-4 Nm (27-35 in-lbs)
13. Hose - coolant inlet pipe to radiator
14. Overflow bottle
15. Hose
16. Cap
17. Clamp - overflow hose
18. Sleeve hose
19. Clamp - black @ 3-4 Nm (27-35 in-lbs)
20. Hose
21. Hose
22. Hose cover
23. Overflow hose

Figure 6-17. Coolant Pipes and Hoses

ASSEMBLY

PART NO.	SPECIALTY TOOL
HD-25070	Robinair heat gun

1. See Figure 6-17. If removed, thread the air bleed plug (5) with **new** seal (6) into the coolant outlet pipe (3).
2. Remove **new** shrink clamp (9) from packaging brace by squeezing band to collapse, then fold in half and remove from cardboard. Slide shrink clamps over hoses.
3. Orient radiator hoses with embossed arrow (11) on top and towards front. Push hose over fitting beads on coolant inlet and coolant outlet pipes (2, 3).
4. Orient shrink clamps (9) so print on the clamp is visible after shrinking. Slide clamp over end of hose to overlap the bulge formed by fitting bead of coolant pipe.

CAUTION

Do NOT use open flame to shrink clamp. Using an open flame could result in uncontrolled melting of clamp.

5. Using an ROBINAIR HEAT GUN (Part No. HD-25070) or similar tool, apply heat to shrink clamps (9). Move heat tool around clamp continuously to prevent burning.

NOTE

Heated area must cover at least 1/3 of clamp surface. If heating shrink clamp while hose and pipe are still mounted in motorcycle, take care not to damage surrounding components.

6. Heat until print turns grey and them remove heat.

NOTE

Check seal by trying to rotate hose on fitting by hand. Hose and clamp should NOT turn when using reasonable torque.

7. Repeat for each shrink clamp required.

INSTALLATION

1. See Figure 6-17. With upper black clamp (19) on hose (20) and lower black clamp (19) loose, install coolant outlet pipe (3).
2. With embossed arrow (11) pointing towards front and on top, push hose (10) over neck bead of radiator inlet neck. Push hose (20) onto outlet neck of thermostat housing.

NOTE

A lubricant, tire soap or detergent and water, can be used to lubricate the hose to aid in pushing hose over neck beads.

3. With hose cover (22), clamp (19), and bright clamp (12) loose on hose, install coolant inlet pipe (2).
4. With embossed arrow (11) pointing towards front and on top, push hose (13) over neck bead of radiator outlet and push hose (21) over water pump inlet neck.
5. Use a long thin screwdriver (Snap-on Part No. SDD1410) to tighten worm drive clamps (12, 19) to 3-4 Nm (27-35 **in-lbs**).
6. Install p-clamp (8) and pipe clamp (4) over both pipes. Tighten pipe clamp (4) to 6.5 Nm (57 **in-lbs**) and tighten p-clamp to 6-10 Nm (53-88 **in-lbs**).
7. Install, through right side cover opening, overflow bottle (14) with hose (15), and cap (16). L-shaped catch on bottom of bottle fits to slot in battery bracket. Push on drain hose to radiator/oil cooler assembly.
8. Install and clamp overflow hose (23) to filler neck and overflow bottle cap (16).
9. Pressure test to 103 kPa (15 psi).
10. Install air filter bottom, velocity stacks, O-rings, and breather hose. See 1.4 AIRBOX AND AIR FILTER.
11. Loosen air bleed plug. Fill with GENUINE HARLEY-DAVIDSON EXTENDED LIFE ANTIFREEZE & COOLANT through filler neck.
12. Tighten air bleed plug to 9-11 Nm (80-97 **in-lbs**). and reinstall pressure cap.
13. Reinstall the negative battery cable. Tighten to 6.8-10.8 Nm (60-96 **in-lbs**).
14. Install air filter, air filter top and airbox cover.
15. Install right side cover and maxi-fuse.
16. Rinse motorcycle with water to remove any spilled collant.
17. After running engine, check coolant level in overflow bottle with coolant cold and motorcycle on jiffy stand. If level is below COLD FULL line, remove cap from overflow bottle and add antifreeze until fluid level reaches COLD FULL line.
18. Continue to run engine, check level, and add antifreeze until fluid level remains at COLD FULL line with the motorcycle on the jiffy stand.

OIL LINE FITTINGS 6.7

GENERAL

Oil in at the crankcase fitting. Oil out at the oil filter fitting.

REMOVAL

PART NO.	SPECIALTY TOOL
HD-46503	Oil line remover

WARNING

Do not remove radiator filler cap when engine is hot. The cooling system is under pressure and hot coolant and steam can escape, which could cause severe burns. Allow engine to cool before servicing the cooling system. (00091a)

1. Allow cooling system to cool.
2. Remove right side cover and maxi-fuse.

WARNING

To prevent accidental vehicle start-up, which could cause death or serious injury, disconnect negative (-) battery cable before proceeding. (00048a)

3. Remove negative battery cable.
4. Snap the plastic dust cap from the quick connect oil line fitting at the crankcase (oil in) and slide it up the oil pipe.

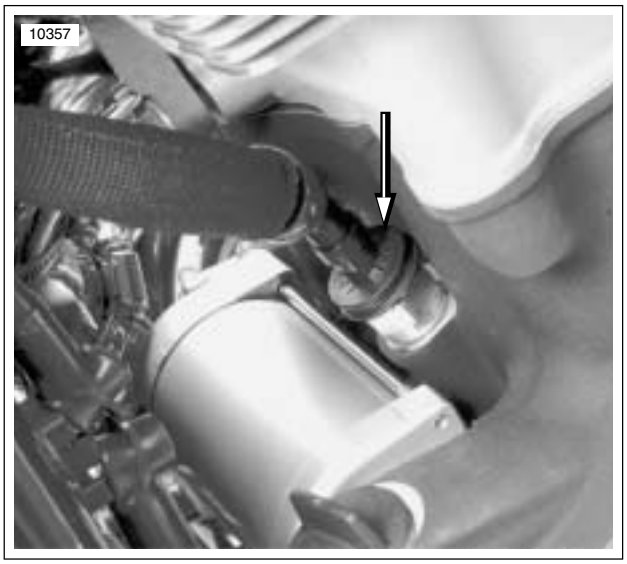

Figure 6-18. Crankcase Oil Line (oil in) Fitting

5. See Figure 6-19. Close the OIL LINE REMOVER (HD-46503) over the oil line. Match the notches in the tool flange to the U-bends in the spring clip.
6. See Figure 6-20. Rotate the tool to expand the spring clip out of the groove in the oil fitting.
7. With a cup under the fitting, use finger and thumb to hold the OIL LINE REMOVER (HD-46503) squarely against the fitting to keep the spring clip expanded. Use only enough pressure to hold the tool square. Excess pressure will prevent simultaneously pulling the line and tool from the fitting.
8. Pull the oil line and the tool from the fitting.
9. Repeat to remove the oil line from the remaining oil line fitting.
10. Remove oil line fittings and plug the holes until they can be replaced.
11. Remove radiator/oil cooler assembly. See 6.8 RADIATOR/OIL COOLER.
12. Supporting the radiator/oil cooler assembly, pull the assembly far enough forward to access the oil filter (oil out) fitting.
13. Snap the plastic dust cap from the quick connect oil line fitting at the oil filter.
14. Use the OIL LINE REMOVER (HD-46503) to remove the oil line from the fitting.
15. Remove the radiator/oil cooler assembly.

Figure 6-19. OIL LINE REMOVER (HD-46503)

Figure 6-20. Oil Line Fitting with Spring Clip

INSTALLATION

1. Install oil line fittings with O-ring into crankcase (oil in) and oil filter mount (oil out). Tighten to 40-44 Nm (29-32 ft-lbs).
2. See Figure 6-21. Supporting the radiator/oil cooler assembly, push the flanged oil line into the oil filter (oil out) fitting until it clicks in place under the spring clip.
3. Snap the plastic dust cap over the spring clip groove.
4. Install the radiator/oil cooler assembly. See 6.8 RADIATOR/OIL COOLER.
5. Push the flanged oil line into the crankcase (oil in) fitting until it clicks in place under the spring clip.

NOTE

Yellow witness band on the flanged oil line will not be visible if the oil line has been correctly snapped into the fitting.

6. Snap the plastic dust cap over the spring clip groove.

NOTE

Dust cap will not snap onto fitting if the oil line is not correctly installed on fitting.

7. Lightly tug on oil line to verify that it is securely locked to fitting.
8. Check oil level and add oil if required.
9. Reinstall the negative battery cable. Tighten to 6.8-10.8 Nm (60-96 **in-lbs**).
10. Install maxi-fuse and right side cover.
11. After running engine,
    a. Inspect oil fittings for oil leaks.
    b. Check oil level and add oil if required.
    c. Check coolant level in overflow bottle with coolant cold and motorcycle on jiffy stand. Continue to run engine, check level, and add antifreeze until fluid level remains at COLD FULL line with motorcycle on jiffy stand. See 1.5 COOLING SYSTEM.

Figure 6-21. Flanged Oil Line

RADIATOR/OIL COOLER 6.8

GENERAL

The heat exchangers, or radiators, for both engine cooling and oil cooling are bolted together in a single radiator/oil cooler assembly. The radiator/oil cooler assembly is fasten to the frame with:

- Double threaded studs near the steering head.
- Two pins and rubber grommets on the bottom of the oil cooler that fit the frame cross member.

REMOVAL

PART NO.	SPECIALTY TOOL
HD-46503	Oil line remover

WARNING

Do not remove radiator filler cap when engine is hot. The cooling system is under pressure and hot coolant and steam can escape, which could cause severe burns. Allow engine to cool before servicing the cooling system. (00091a)

1. Allow cooling system to cool.
2. Remove right side cover and maxi-fuse. See 8.5 MAXI-FUSE.

WARNING

To prevent accidental vehicle start-up, which could cause death or serious injury, disconnect negative (-) battery cable before proceeding. (00048a)

3. Remove negative battery cable.
4. Remove airbox decorative cover, airbox cover, air filter cover and air filter. See 1.4 AIRBOX AND AIR FILTER.
5. See Figure 6-23. Remove fastener and right radiator trim cover.
6. Pull rear brake master cylinder reservoir straight away from its mounting slots in right side of radiator cover.

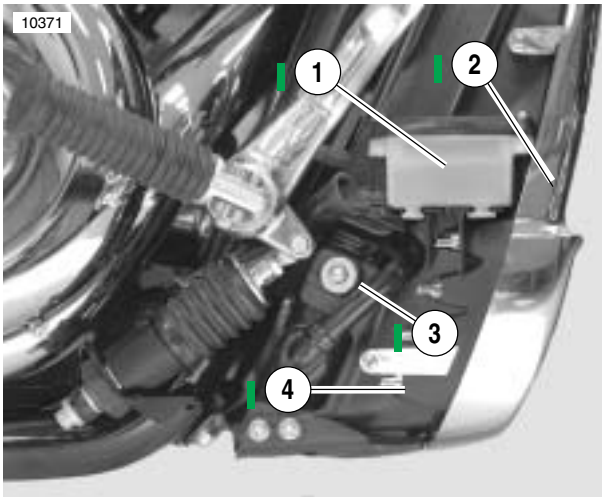

1. **Rear brake master cylinder reservoir**
2. **Chrome inlet bezel**
3. **Fastener and washer**
4. **Radiator cover**

Figure 6-22. Right Side Radiator

7. See Figure 6-23. Remove fastener and left radiator trim cover.

NOTE

Before removing wiring harnesses, carefully note wire routing. In particular, pay close attention to locations of cable wraps that must be replaced.

8. Clip cable wrap tying cooling fan wire harness to crankshaft position sensor (CKP) harness.
9. Push straight down to remove stator to regulator connector [46] from metal clip on side of radiator cover.
10. Push connectors and wire harnesses away from coolant drain plug up and behind shift lever.
11. Place a container under left side of radiator.
12. See Figure 6-23. Loosen but do not remove coolant drain plug (3). Turn drain plug until slot in threads drains into container.
13. Open seat and remove pressure cap to accelerate coolant drain from radiator.
14. Hand tighten coolant drain plug. See 6.3 ENGINE COOLANT.
15. Place a container under engine, remove oil filler plug/dipstick, and oil drain plug and drain oil. Reinstall dipstick and drain plug. See 1.6 ENGINE OIL AND FILTER.
16. Separate stator to regulator connector [46].
17. Remove top cooling fan connector [97 T] from radiator cover by rocking first one way and with a finger pull the connector tab to compress butterfly peg.
18. Separate top cooling fan wiring harness connector [97T] and bottom cooling fan connector [97B].
19. Separate crank position sensor connector [79]
20. Cover front fender with shop towel or protective cover. Remove fasteners and washers on each side of radiator cover. Remove radiator cover with chrome inlet bezels attached.

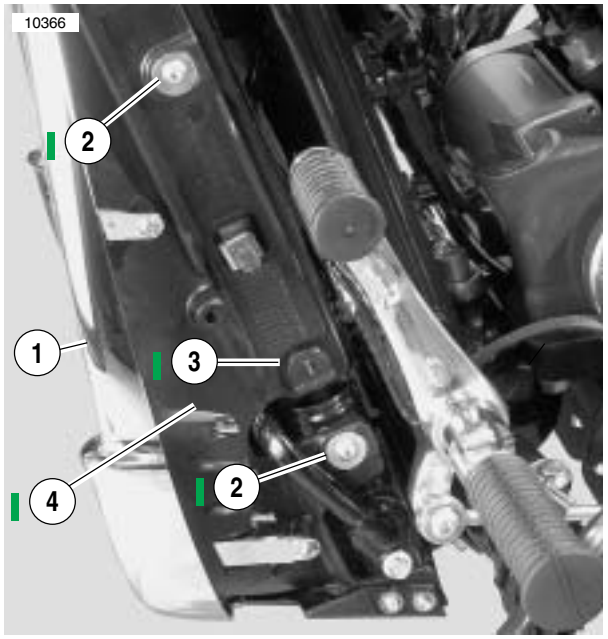

1. **Chrome inlet bezel**
2. **Fastener and washer**
3. **Coolant drain plug**
4. **Radiator cover**

Figure 6-23. Left Side Radiator

NOTE

Both the oil line lines to the oil cooler remain fastened to the radiator/oil cooler assembly. The drain hose from the expansion bottle also remains clipped to the assembly.

21. Use a long thin screwdriver (Snap-on Part No. SDD1410) to loosen worm drive clamps on both engine coolant hoses at radiator.
22. Disconnect the end of drain hose from the overflow bottle.
23. See Figure 6-24. Loosen but do not remove nuts holding assembly to front engine mount studs.
24. Remove fasteners under radiator assembly that hold cross member to frame. Gently pull bottom of radiator/oil cooler assembly forward.
25. Snap the plastic dust cap from the quick connect oil line fitting at the oil filter (oil out).
26. See Figure 6-19. Close the OIL LINE REMOVER (HD-46503) over the oil line. Match the notches in the tool flange to the U-bends in the spring clip.
27. See Figure 6-20. Holding the oil line in the palm of the hand, rotate the tool to expand the spring clip out of the groove in the oil fitting.
28. With a cup under the fitting, use finger and thumb to hold the OIL LINE REMOVER (HD-46503) squarely against the fitting to keep the spring clip expanded. Use only enough pressure to hold the tool square. Excess pressure will prevent pulling the line and tool from the fitting simultaneously.
29. Pull the oil line and the tool from the fitting.
30. Repeat to remove the oil line from the crankcase (oil in) oil line fitting. See 6.7 OIL LINE FITTINGS.
31. Remove nuts holding radiator assembly to engine mount studs and remove radiator/oil cooler assembly.
32. Retain bushings, grommets and washers.

INSTALLATION

PART NO.	SPECIALTY TOOL
HD-46503	Oil line remover

CAUTION

Carefully clean the front surface of the radiator regularly. Leaves and other debris can collect on the radiator surface and degrade radiator performance. This could lead to engine overheating and engine damage. (00197a)

1. Cover front fender with a shop towel or protective cover.
2. Hold radiator/oil cooler assembly up to frame.
3. Line up and fit inlet and outlet pipes to radiator hoses.
4. Push oil line into oil out fitting on oil filter. Snap plastic ring around spring clip groove on fitting. See 6.7 OIL LINE FITTINGS.
5. Thread on but do not tighten nuts holding radiator/oil cooler assembly to engine mount studs.
6. Push oil line into oil in fitting on crankcase. Snap plastic ring around spring clip groove on fitting. See 6.7 OIL LINE FITTINGS.
7. See Figure 6-24. Slip cross member (26) over grommets (22) on radiator mounting pins. Install cross member to frame.
8. Tighten cooling system fasteners to following:
   a. Cross member fasteners to 20-26 Nm (15-19 ft-lbs).
   b. Top mounting nuts (10) to 19-27 Nm (15-20 ft-lbs).
   c. Pipe clamp to 6.5 Nm (57 **in-lbs**).
   d. P-clamp to 6-10 Nm (53-88 **in-lbs**).
   e. Hose clamps to 3-4 Nm (27-35 **in-lbs**).
9. Route drain hose (4) to overflow bottle.
10. Install radiator cover.

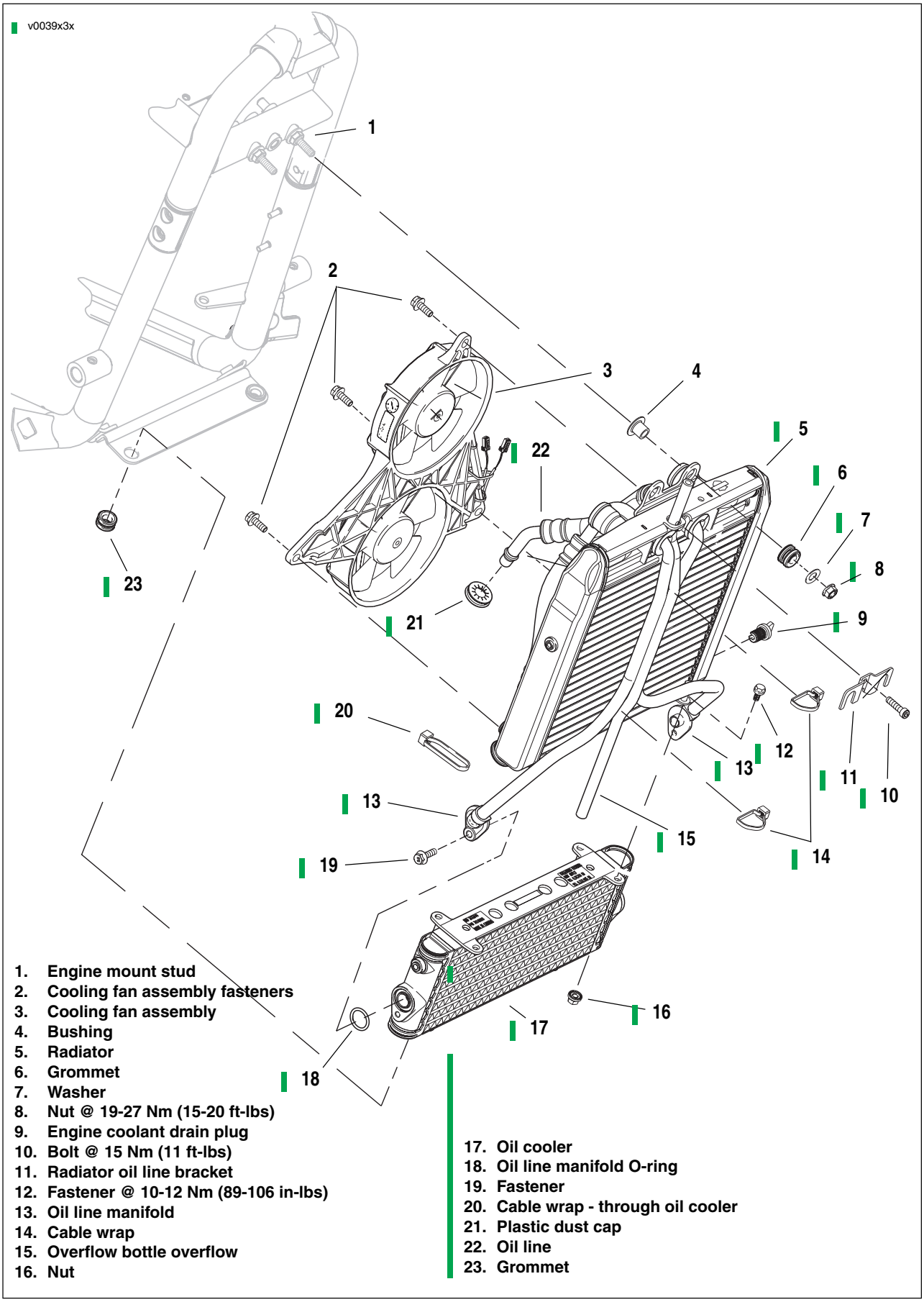

Figure 6-24. Radiator/Oil Cooler Assembly

11. Mate:
    a. Crank position sensor connector [79] halves.
    b. Top and bottom cooling fan connector [97 T], [97B] halves.
    c. Stator to voltage regulator connector [46] halves.
12. Push top fan connector [97T] into radiator cover.
13. Cable wrap fan wiring harness to crank position sensor wiring harness and mounting both through frame dip.
14. Install left and right side radiator covers.
15. Fill engine with oil. See 1.6 ENGINE OIL AND FILTER.
16. Install air filter bottom, velocity stacks, O-rings and breather hose. See 1.4 AIRBOX AND AIR FILTER.
17. Loosen air bleed plug. Fill with GENUINE HARLEY-DAVIDSON EXTENDED LIFE ANTIFREEZE & COOLANT through filler neck. See 6.3 ENGINE COOLANT.
18. Tighten air bleed plug to 9-11 Nm (80-97 **in-lbs**). and reinstall pressure cap.
19. Install air filter, air filter top and air filter cover. See 1.4 AIRBOX AND AIR FILTER.

CAUTION

Connect the cables to the correct battery terminals. Failure to do so could result in damage to the motorcycle electrical system. (00215a)

CAUTION

Do not over-tighten bolts on battery terminals. Use recommended torque values. Over-tightening battery terminal bolts could result in damage to battery terminals. (00216a)

⚠WARNING

Connect positive (+) battery cable first. If positive (+) cable should contact ground with negative (-) cable connected, the resulting sparks can cause a battery explosion, which could result in death or serious injury. (00068a)

20. Reinstall the negative battery cable. Tighten to 6.8-10.8 Nm (60-96 **in-lbs**).
21. Install right side cover and maxi-fuse.
22. After running engine, inspect oil fittings for oil leaks. Check oil level and add oil if required.
23. After running engine, check coolant level in overflow bottle with coolant cold with motorcycle on jiffy stand. If level is below COLD FULL line, remove cap from overflow bottle and add antifreeze until fluid level reaches COLD FULL line.
24. Continue to run engine, check level, and add antifreeze until fluid level remains at COLD FULL line with motorcycle on jiffy stand.

OIL COOLER 6.9

REMOVAL

WARNING

Do not remove radiator filler cap when engine is hot. The cooling system is under pressure and hot coolant and steam can escape, which could cause severe burns. Allow engine to cool before servicing the cooling system. (00091a)

1. Allow cooling system to cool.
2. Remove right side cover and maxi-fuse. See 8.5 MAXI-FUSE.

WARNING

To prevent accidental vehicle start-up, which could cause death or serious injury, disconnect negative (-) battery cable before proceeding. (00048a).

3. Remove negative battery cable.
4. Remove oil lines from oil fittings. See 6.7 OIL LINE FITTINGS.
5. Remove the radiator/oil cooler assembly. See 6.8 RADIATOR/OIL COOLER.
6. See Figure 6-24. With assembly on bench and holding a cup under each line, remove the fasteners holding oil line manifolds to oil cooler. Discard O-rings.
7. If replacing oil lines:
   a. Remove oil line bracket fastener and bracket with spacers bushings, grommets and washers.
   b. Cut cable wraps around drain hose and oil lines.
   c. Remove drain hose and oil cooler outlet and inlet pipes.
8. Cut cable wrap holding expansion bottle drain hose to oil cooler.
9. Remove fasteners holding oil cooler to engine coolant radiator. Remove oil cooler.

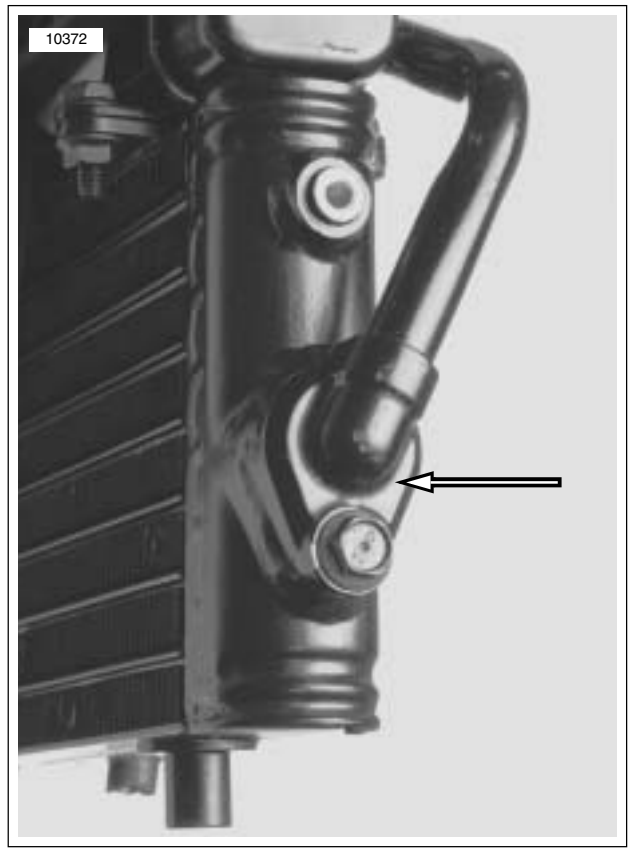

Figure 6-25. Oil Line Manifold

INSTALLATION

1. See Figure 6-26. Install oil cooler to engine coolant radiator. Tighten front and rear fasteners (4) to 10-12 Nm (89-106 **in-lbs**).
2. If installing oil pipes:
   a. Route oil pipes in front and over top of engine coolant radiator.
   b. Install radiator oil line bracket (2) over the oil lines and tighten fastener to 8-10 Nm (71-88 **in-lbs**).
   c. Install **new** O-rings in the oil cooler ports.
   d. Install fasteners holding oil line manifolds to oil cooler. Tighten to 8-10 Nm (71-88 **in-lbs**).
   e. Route drain (1) hose on centerline of oil cooler.

NOTE

Incorrect routing of drain hose may cause interference with radiator cover.

   f. Cable wrap (5) oil lines (7, 3) and drain hose (1) to coolant radiator at upper and lower points on straight portion prior to bend in lines.
   g. Cable wrap end of drain hose through oil cooler cooling fins (6).
   h. See Figure 6-24. Install spacer, bushings grommet, and washers to radiator/oil cooler assembly mounting bracket.
3. Install the radiator/oil cooler assembly. See 6.8 RADIATOR/OIL COOLER.

CAUTION

Connect the cables to the correct battery terminals. Failure to do so could result in damage to the motorcycle electrical system. (00215a)

CAUTION

Do not over-tighten bolts on battery terminals. Use recommended torque values. Over-tightening battery terminal bolts could result in damage to battery terminals. (00216a)

⚠WARNING

Connect positive (+) battery cable first. If positive (+) cable should contact ground with negative (-) cable connected, the resulting sparks can cause a battery explosion, which could result in death or serious injury. (00068a)

4. Install the negative battery cable. Tighten to 6.8-10.8 Nm (60-96 **in-lbs**).
5. Install maxi-fuse and right side cover.
6. After running engine:
   a. Inspect oil pipes and fittings for oil leaks.
   b. Check oil level and add oil if required.
   c. Check coolant level in overflow bottle with coolant cold and motorcycle on jiffy stand and add coolant if required.

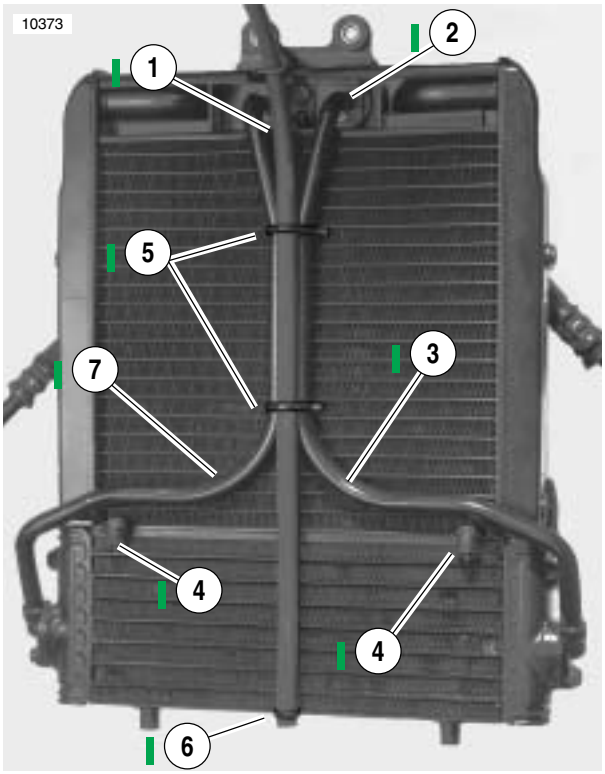

1. **Drain hose**
2. **Oil line bracket**
3. **Oil line to crankcase**
4. **Oil cooler to radiator fasteners @ 10-12 Nm (89-106 in-lbs)**
5. **Cable wrap**
6. **Cable wrap through cooling fins**

Figure 6-26. Radiator/Oil Cooler Assembly